| rev: | revision text: | rev.date: | rev.by: | aprv. date: | aprv. by: |
|---|---|---|---|---|---|
| 02 | general simplification | 2023-12-20 | KaiGünd | 2023-12-20 | MicNaeb |
| 03 | Ausschnitt oben geändert | 2025-04-24 | SimHube | 2025-04-24 | MicNaeb |
| 04 | hole pattern updated | 2025-04-25 | SimHube | 2025-04-25 | MicNaeb |
| 05 | Center mark and drilling changed | 2025-07-14 | SimHube | 2025-07-14 | MicNaeb |

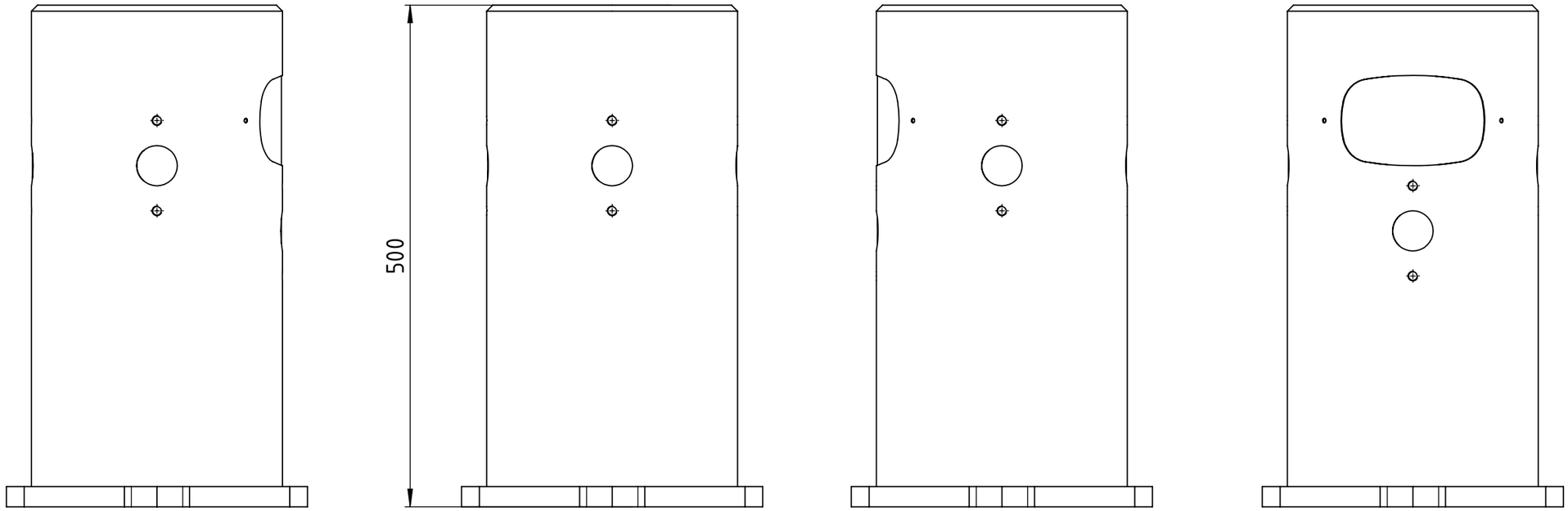


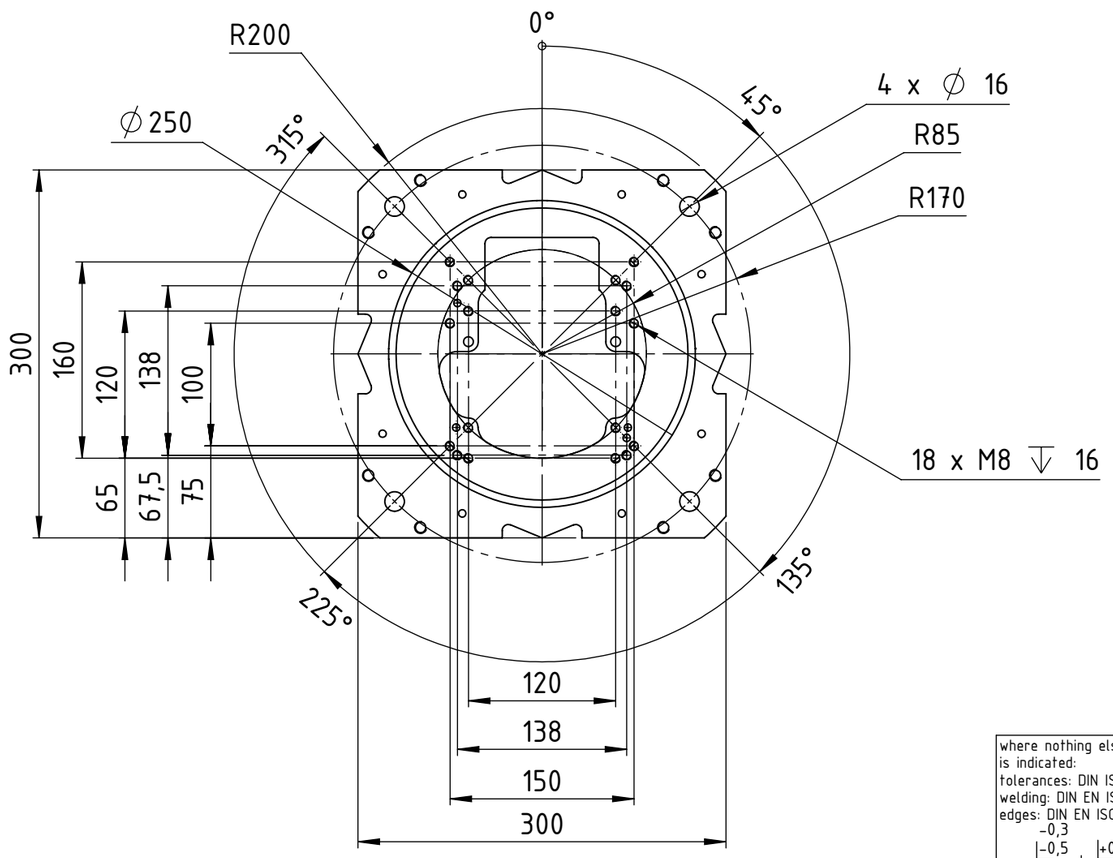


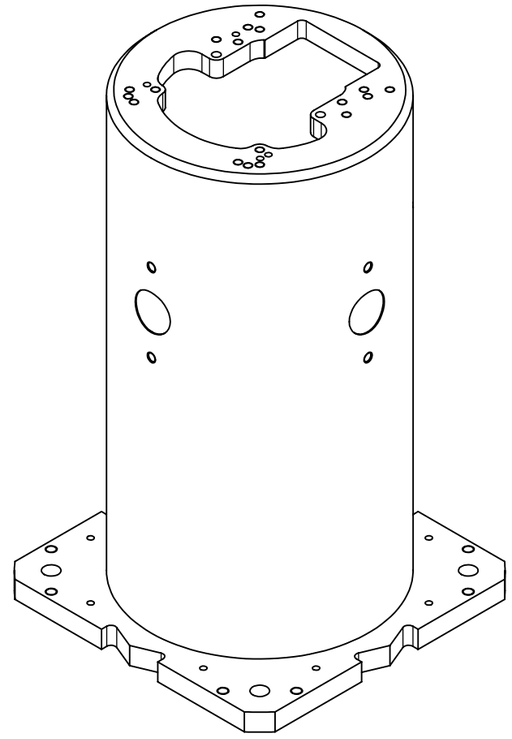

| | | | | | |
|---|---|---|---|---|---|
| where nothing else is indicated: tolerances: DIN ISO 2768-mH welding: DIN EN ISO 13920-A edges: DIN EN ISO 13715 -0,3 -0,5 +0,3 | status: Released | | YASKAWA www.yaskawa.eu.com | dimension: 500x300x300 mm | weight: 20,442 kg |
| | SAP EMEA nr: | SAP AH nr: 230481 | | created: 2023-07-05 | MicNaeb |
| | title / description: robot stand A-500 | | | drawn: 2023-07-05 | MicNaeb |
| | | | | approved: 2023-07-06 | MarWiss |
| | | | | drawing-nr.: 0001059963-100 | revision: 05 |

sheet: A3 1:5 4/5

CONFIDENTIAL! The reproduction, distribution and utilization of this document as well as the communication of its contents to others without express authorization is prohibited. Offenders will be held liable for the payment of damages. All rights reserved in the event of the grant of a patent, utility model or design